REAR BUMPER

COMPONENTS
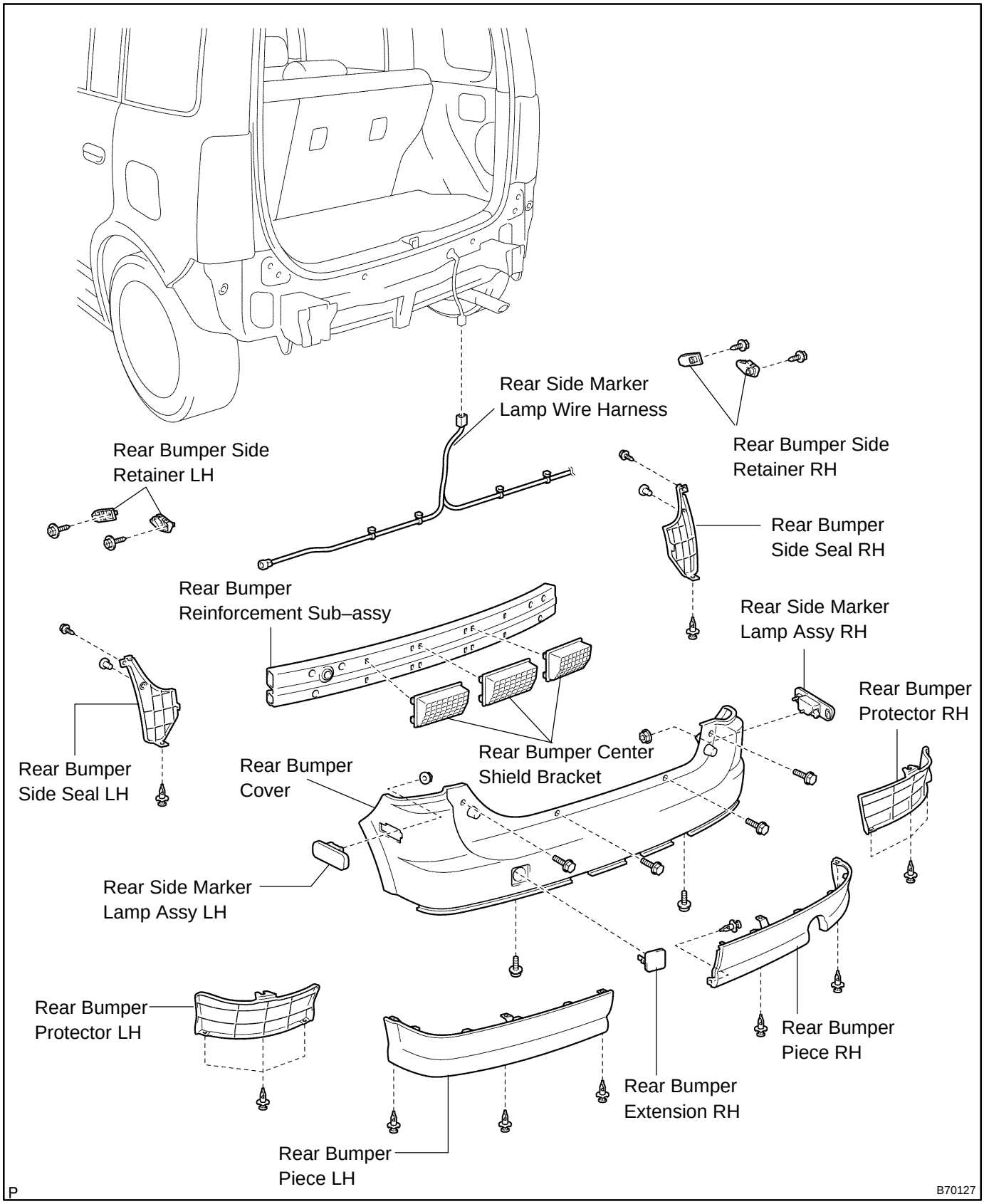
760ZW–01